FOR PROFESSIONAL
AUTOMOTIVE TIRE SERVICE

K926 TILT-BACK TIRE CHANGER WITH ASSIST ARM

WIDE CLAMPING RANGE. CONTROLLED OPERATION. PROFESSIONAL PERFORMANCE.

The K&L Supply K926 combines a wide clamping range, pneumatic tilt-back column, synchronized self-centering turntable, and dedicated assist arm for efficient professional tire service. Designed for passenger vehicles, SUVs, vans, and light-duty commercial vehicles, it gives technicians the control needed to mount and demount a broad range of tire-and-wheel assemblies.



12-26 IN.
EXTERNAL CLAMPING

14-28 IN.
INTERNAL CLAMPING

44.1 IN.
MAXIMUM WHEEL DIAMETER

BUILT FOR VERSATILE TIRE SERVICE

Wide-ranging capability and technician-focused features for professional automotive service facilities.

35-8689

01
CENTERS WHEELS EFFICIENTLY
The synchronized four-jaw turntable automatically centers the wheel during clamping.

02
CLEAR THE WORK AREA
The pneumatic tilt-back column moves away from the turntable and locks automatically into position.

03
CONTROL DIFFICULT TIRES
The included assist arm helps press and position stiff tire sidewalls during mounting and demounting.

04
SERVICE MORE WHEEL SIZES
Accommodates wheels up to 44.1 inches in diameter and from 3 to 15 inches wide.

Designed for professional automotive tire service, the K&L Supply K926 combines a 12-26-inch external and 14-28-inch internal clamping range with support for wheels up to 44.1 inches in diameter. Its synchronized turntable provides automatic wheel centering and fine positioning for controlled, repeatable operation.

The pneumatic tilt-back column helps technicians quickly clear the working area, while the included assist arm provides additional tire-positioning support. Together, these features make the K926 a versatile solution for servicing passenger-car, SUV, van, and light-duty commercial tire-and-wheel assemblies.

MORE RANGE. MORE CONTROL. BETTER TIRE SERVICE.

See complete product details and service information online.

800-727-6767 • sales@klsupply.com
dealer.klsupply.com

K926 TILT-BACK TIRE CHANGER WITH ASSIST ARM

FOR PROFESSIONAL AUTOMOTIVE TIRE SERVICE

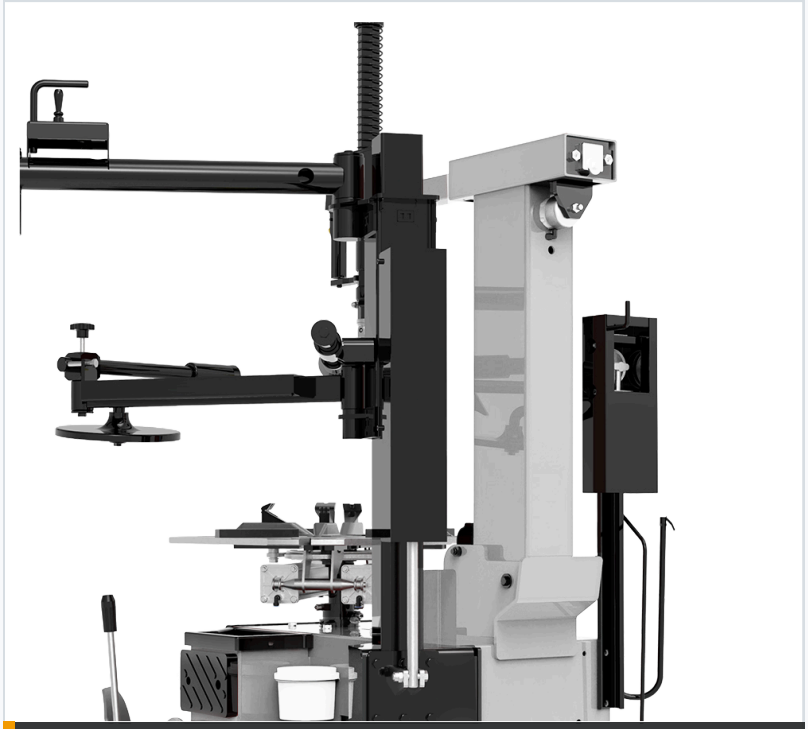

PNEUMATIC TILT-BACK COLUMN
Moves away from the turntable to create additional working clearance.



DEDICATED ASSIST ARM
Provides additional control when positioning demanding tire sidewalls.

PRODUCT SPECIFICATIONS

External Clamping Range	12-26 in.
Internal Clamping Range	14-28 in.
Maximum Wheel Diameter	44.1 in. / 1120 mm
Wheel Width Range	3-15 in.
Working Air Pressure	116-145 psi / 8-10 bar
Approximate Equipment Weight	683 lb / 310 kg, including assist arm
Machine Dimensions	35.8 x 41.3 x 72.1 in.
Included Equipment	Pneumatic assist arm
Optional Equipment	Bead-seating inflation system

ENGINEERED FOR THE PROFESSIONAL TIRE BAY.

The K926 brings essential tire-changing functions together in one technician-focused machine. Its broad clamping range, pneumatic tilt-back column, synchronized turntable, and included assist arm support controlled, efficient service across a wide range of automotive wheels.

SYNCHRONIZED SELF-CENTERING
The four-jaw turntable automatically centers the wheel during clamping.

PNEUMATIC TILT-BACK COLUMN
Moves away from the turntable and locks into position for convenient wheel access.

ASSISTED TIRE POSITIONING
The pneumatic assist arm helps control and position demanding tire sidewalls.

BROAD WHEEL CAPACITY
Accommodates wheels up to 44.1 inches in diameter and from 3 to 15 inches wide.

CONTROLLED OPERATION
Fine positioning and low-noise operation support a smoother service process.

OPTIONAL BEAD-SEATING SYSTEM
An optional inflation system provides additional support when seating tire beads.

RECOMMENDED APPLICATIONS
AUTOMOTIVE DEALERSHIPS

RECOMMENDED APPLICATIONS
INDEPENDENT TIRE & REPAIR SHOPS

RECOMMENDED APPLICATIONS
FLEET & LIGHT-COMMERCIAL SERVICE

MORE RANGE. MORE CONTROL. BETTER TIRE SERVICE.

See complete product details and service information online.

800-727-6767 • sales@klsupply.com
dealer.klsupply.com