FOR PROFESSIONAL
AUTOMOTIVE TIRE SERVICE

K720 SWING-ARM TIRE CHANGER

COMPACT FOOTPRINT. BROAD CAPABILITY. PROFESSIONAL CONTROL.

The K&L Supply K720 Swing-Arm Tire Changer combines a compact design, automatic wheel centering, and synchronized four-jaw clamping for efficient everyday tire service. Its standard configuration supports passenger vehicles, SUVs, vans, and compatible light-duty commercial vehicles, while the optional K&L Supply 30" Adapters Complete Kit expands its capability for motorcycle wheels.



10-22 IN.
EXTERNAL CLAMPING

12-24 IN.
INTERNAL CLAMPING

40.9 IN.
MAXIMUM WHEEL DIAMETER

BUILT FOR VERSATILE TIRE SERVICE

Reliable wheel clamping and controlled operation in a compact professional machine.

35-8691

01
CENTER WHEELS AUTOMATICALLY
The synchronized four-jaw turntable centers the wheel from the inside or outside during clamping.

02
POSITION WITH CONTROL
Fine turntable adjustment helps technicians accurately position wheels during mounting and demounting.

03
SERVICE COMMON WHEEL SIZES
Accommodates wheels up to 40.9 inches in diameter and from 3 to 12 inches wide.

04
EXPAND INTO MOTORCYCLE SERVICE
Install the optional K&L Supply 30" Adapters Complete Kit to expand clamping capability to 12-30 inches for motorcycle wheels.

Designed for professional tire service, the K&L Supply K720 combines a 10-22-inch external and 12-24-inch internal clamping range with support for wheels up to 40.9 inches in diameter. Its synchronized four-jaw turntable provides automatic wheel centering and fine positioning for smooth, controlled operation.

The swing-arm design provides convenient access to the tire-and-wheel assembly while maintaining a compact shop footprint. With the optional K&L Supply 30" Adapters Complete Kit, the K720 expands its clamping capability to accommodate 12-30-inch motorcycle wheels, making it a versatile solution for automotive and motorcycle tire service.

CONTROL THE WHEEL. SIMPLIFY TIRE SERVICE.

See complete product details and service information online.

800-727-6767 • sales@klsupply.com
dealer.klsupply.com

K720 SWING-ARM TIRE CHANGER

FOR PROFESSIONAL AUTOMOTIVE TIRE SERVICE

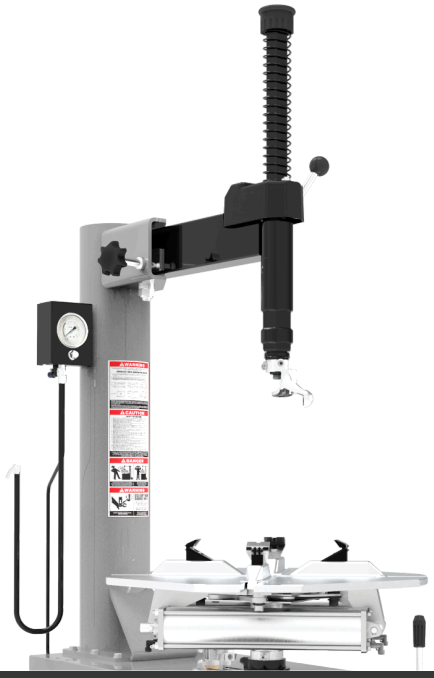

SWING-ARM OPERATION

The swing-arm design creates convenient working clearance during tire mounting and demounting.



MOTORCYCLE WHEEL ADAPTABILITY

The optional 30" Adapters Complete Kit expands the K720's clamping capability to accommodate motorcycle wheels from 12 to 30 inches.

PRODUCT SPECIFICATIONS

External Clamping Range	10-22 in.
Internal Clamping Range	12-24 in.
Maximum Wheel Diameter	39.4in. / 1000 mm
Wheel Width Range	3-12 in.
Working Air Pressure	116-145 psi / 8-10 bar
Machine Dimensions (L × W × H)	31.3 × 38.1 × 71.8 in.
Machine Weight	Approx. 401 lb. / 182 kg
Motor Power	0.75 kW / 1.1 kW
Electrical Configuration	110V, 220V, or 380V

ENGINEERED FOR THE PROFESSIONAL TIRE BAY.

The K720 combines straightforward swing-arm operation, automatic wheel centering, and a compact footprint for dependable everyday tire service. Its synchronized turntable and fine positioning capability help technicians work accurately across a broad range of automotive wheels. With the optional K&L Supply 30" Adapters Complete Kit, shops can expand the K720's clamping capability to accommodate 12-30-inch motorcycle wheels. This added flexibility makes the K720 a practical solution for facilities servicing both automotive and motorcycle applications.

AUTOMATIC SELF-CENTERING
The four-jaw linkage provides synchronized clamping and automatically centers the wheel.

SWING-ARM ACCESS
Moves away from the wheel to provide convenient access to the tire-and-wheel assembly.

FINE TURNTABLE CONTROL
Fine positioning supports controlled, repeatable mounting and demounting procedures.

MOTORCYCLE WHEEL ADAPTABILITY
The optional 30" Adapters Complete Kit expands clamping capability to accommodate motorcycle wheels from 12 to 30 inches.

RECOMMENDED APPLICATIONS
AUTOMOTIVE DEALERSHIPS

RECOMMENDED APPLICATIONS
INDEPENDENT TIRE & REPAIR SHOPS

RECOMMENDED APPLICATIONS
MOTORCYCLE & POWERSPORTS SHOPS

CONTROL THE WHEEL. SIMPLIFY TIRE SERVICE.

See complete product details and service information online.

800-727-6767 • sales@klsupply.com
dealer.klsupply.com