FOR MOTORCYCLE & AUTOMOTIVE TIRE SERVICE

K710 MOTORCYCLE & AUTOMOTIVE TIRE CHANGER

DUAL-PURPOSE CAPABILITY. DEPENDABLE OPERATION. PROFESSIONAL VALUE.

The K&L Supply K710 is a versatile tire-changing workhorse designed for both motorcycle and automotive applications. Its broad clamping capability, compact swing-arm configuration, and straightforward controls make it a practical, cost-effective solution for dealerships, repair facilities, and shops that service multiple vehicle types.



5–24 IN.
MOTORCYCLE CLAMPING

10–22 IN.
AUTOMOTIVE OUTSIDE CLAMPING

12–23 IN.
AUTOMOTIVE INSIDE CLAMPING

2–10 IN.
TIRE WIDTH RANGE

BUILT FOR VERSATILE TIRE SERVICE

One dependable machine for motorcycle and automotive tire-changing applications.

35-6518

01
SERVICE MORE VEHICLE TYPES
Handle motorcycle and automotive tire-and-wheel assemblies with one versatile machine.

02
ACCOMMODATE MORE WHEELS
A broad clamping range gives technicians the flexibility to service a variety of wheels.

03
WORK WITH CONVENIENT CONTROLS
A technician-focused layout keeps the turntable, bead breaker, and operating controls within easy reach.

04
ADD CONTROL FOR DIFFICULT TIRES
The optional K&L Strongarm II Kit provides additional bead-positioning support for stiff-sidewall motorcycle tires.

Designed by K&L Supply for motorcycle and automotive tire service, the K710 combines broad wheel compatibility with straightforward operation in one professional machine. It is a practical solution for shops that want to expand their capabilities without dedicating separate equipment to each vehicle category.

The K710 accommodates motorcycle wheels from 5–24 inches, automotive wheels from 10–22 inches with outside clamping, and automotive wheels from 12–23 inches with inside clamping. Its 2-to-10-inch tire-width range supports everyday service across a variety of tire and wheel assemblies.

ONE MACHINE. MORE SERVICE POSSIBILITIES.

See complete product details and service information online.

800-727-6767 • sales@klsupply.com
dealer.klsupply.com

K710 MOTORCYCLE & AUTOMOTIVE TIRE CHANGER

FOR MOTORCYCLE & AUTOMOTIVE TIRE SERVICE

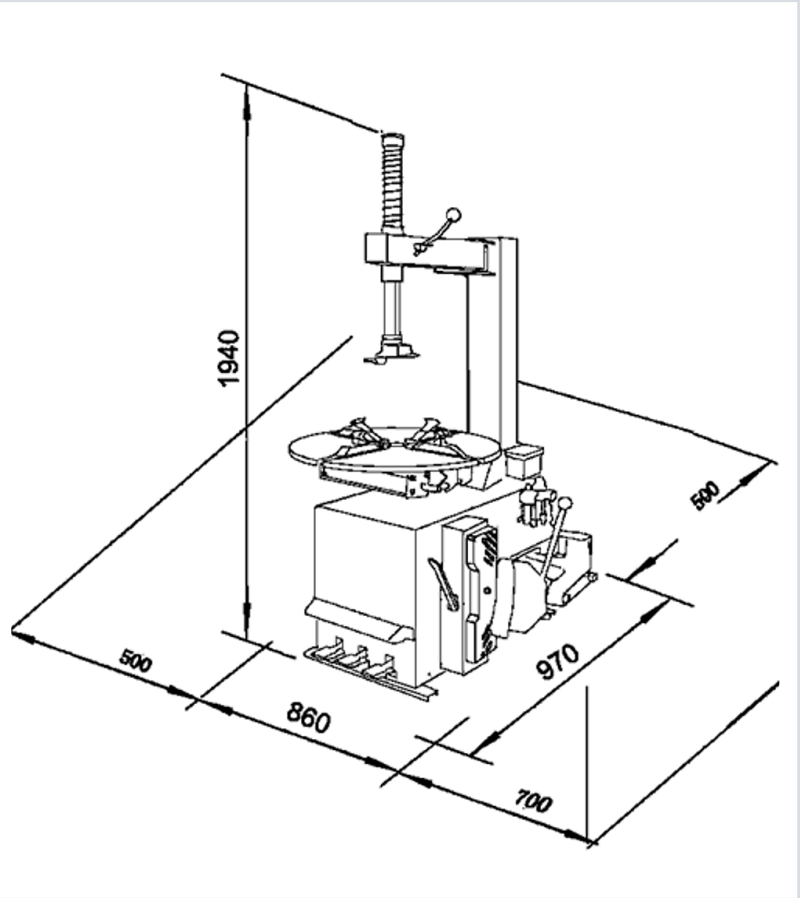



MOTORCYCLE WHEEL ADAPTABILITY

The Motorcycle Wheel Adapters Complete Kit expands the K710's clamping capability to accommodate variety of tire and wheel.

PRODUCT SPECIFICATIONS

Motorcycle Clamping Range	5–24 in.
Automotive Inside Clamping Range	12–23 in.
Automotive Outside Clamping Range	10–22 in.
Minimum Tire Width	2 in.
Maximum Tire Width	10 in.
Required Air Pressure	115–145 psi
SKU Number	SKU 35-6518
Optional Strongarm II Kit	SKU 37-2899

BUILT TO BE A SHOP WORKHORSE.

DESIGNED FOR THE JOB

MOTORCYCLE & AUTOMOTIVE CAPABILITY
One machine supports two important tire-service categories, helping shops work more efficiently.

VERSATILE CLAMPING RANGE
Multiple clamping configurations accommodate a broad selection of motorcycle and automotive wheels.

SWING-ARM CONFIGURATION
Provides convenient access to the tire-and-wheel assembly while maintaining an efficient shop footprint.

SIDE-MOUNTED BEAD BREAKER
Helps technicians separate the tire bead from the wheel before mounting or demounting.

FOOT-PEDAL OPERATION
Conveniently positioned controls keep essential tire-changing functions within easy reach.

OPTIONAL STRONGARM II KIT
The K&L Strongarm II Kit uses air pressure to help hold the tire bead in the wheel's drop center while the turntable rotates. It provides additional control when servicing stiff-sidewall motorcycle tires and helps make challenging tire changes more manageable for one technician.

RECOMMENDED APPLICATIONS
MOTORCYCLE AND POWERSPORTS DEALERSHIPS

RECOMMENDED APPLICATIONS
INDEPENDENT MOTORCYCLE REPAIR SHOPS

RECOMMENDED APPLICATIONS
MIXED AUTOMOTIVE AND POWERSPORTS SHOPS

DUAL-PURPOSE SERVICE. EVERYDAY RELIABILITY.

See complete product details and service information online.

800-727-6767 • sales@klsupply.com
dealer.klsupply.com