AUTOMOTIVE SERVICE EQUIPMENT

K1700 Powertrain Lift

2,400 LB
MAXIMUM CAPACITY

21.5–78 IN.
LIFT HEIGHT RANGE

REMOTE CONTROL
PRECISE LIFT OPERATION

BUILT FOR MODERN POWERTRAIN SERVICE

62-27500

HEAVY-DUTY SUPPORT FOR POWERTRAIN SERVICE.

Engineered for safety, control, and efficiency, the K1700 Powertrain Lift is an all-in-one solution for removing and installing engines, transmissions, EV batteries, and other heavy components. Its 2,400 lb capacity and electric-over-hydraulic operation provide the strength and precision professional service facilities demand.

01 LIFT WITH CONTROL
Electric-over-hydraulic operation provides fast, smooth lifting for precise component handling.

02 POSITION WITH PRECISION
A sliding, split, and tilting work table simplifies heavy component alignment.

03 OPERATE REMOTELY
Remote control operation allows technicians to control the lift while maintaining visibility of the work area.

04 MOVE & SECURE
Locking casters allow for controlled mobility, backed by integrated safety locks for stable positioning.

SLIDING SPLIT & TILTABLE TABLE

OPTIONAL JIG FIXTURES

Engineered for efficiency, safety, and control, the K&L Supply K1700 Powertrain Lift provides a versatile solution for removing, installing, and positioning engines, transmissions, EV batteries, and other heavy components. Its electric-over-hydraulic operation, adjustable work table, remote control, safety locks, and locking casters help technicians handle demanding powertrain service with precision and confidence.

Handle Powertrain Components with Confidence and Control

See complete product details and service information online.

800-727-6767 • sales@klsupply.com
dealer.klsupply.com

K8000 EV BATTERY SERVICE CART

PROFESSIONAL EV BATTERY HANDLING

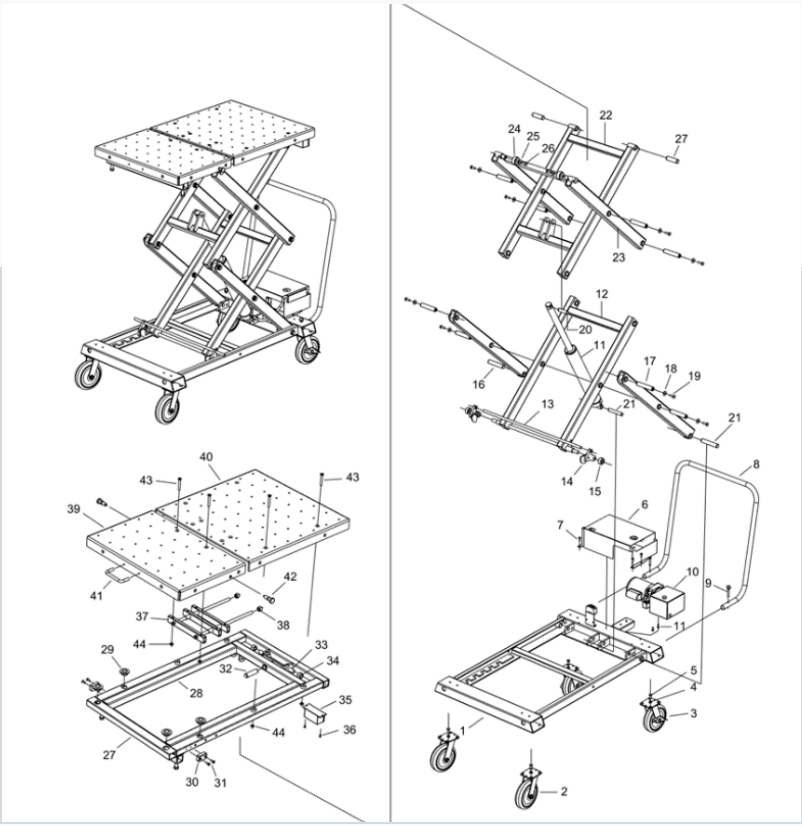

REMOTE CONTROL OPERATION

Control lift movement with fast, smooth electric-over-hydraulic operation.

PRODUCT SPECIFICATIONS

Maximum Capacity	2,400 lb
Lift Height Range	21.5–78 in.
Table Width	36 in.
Table Length	42–50 in.
Operation	Electric Over Hydraulic
Control	Wired Remote
Table	Sliding, Split & Tiltable
Mobility	Locking Casters
SKU	62-27500

BUILT FOR DEMANDING POWERTRAIN SERVICE.

The K1700 brings strength, control, and versatility to professional service environments. Designed to handle engines, transmissions, EV batteries, and other heavy components, it gives technicians a flexible platform for demanding powertrain work.

FAST & SMOOTH LIFTING

Provides controlled movement for precise positioning.

BUILT-IN 110V POWER

Keeps electrical power conveniently available at the work area.

INTEGRATED SAFETY LOCKS

Adds security and stability while the lift is in use.

REMOVEABLE POSITIONING HANDLE

Helps technicians maneuver and position the lift with greater control.

FIXTURE JIGS

Provides added support for a variety of component shapes and sizes.

ALL-IN-ONE VERSATILITY

Designed to support engines, transmissions, EV batteries, and more.

RECOMMENDED APPLICATIONS

OEM DEALERSHIPS & SERVICE CENTERS

RECOMMENDED APPLICATIONS

EV & HYBRID SERVICE FACILITIES

RECOMMENDED APPLICATIONS

AUTOMOTIVE REPAIR & POWERTRAIN SHOPS

Equip your facility for the demands of modern powertrain service.

See complete product details and service information online.

800-727-6767 • sales@klsupply.com
dealer.klsupply.com